This manual is for reference and historical purposes, all rights reserved.
This page is copyright© by M. Butkus, NJ.
This page may not be sold or distributed without the expressed permission of the producer
I have no connection with any camera company

On-line camera manual library
This is the full text and images from the manual. This may take 3 full minutes for the PDF file to download.

If you find this manual useful, how about a donation of $3 to: M. Butkus, 29 Lake Ave., High Bridge, NJ 08829-1701 and send your e-mail address so I can thank you. Most other places would charge you $7.50 for a electronic copy or $18.00 for a hard to read Xerox copy.

This will allow me to continue to buy new manuals and pay their shipping costs.
It'll make you feel better, won't it?
If you use Pay Pal or wish to use your credit card,
click on the secure site on my main page.

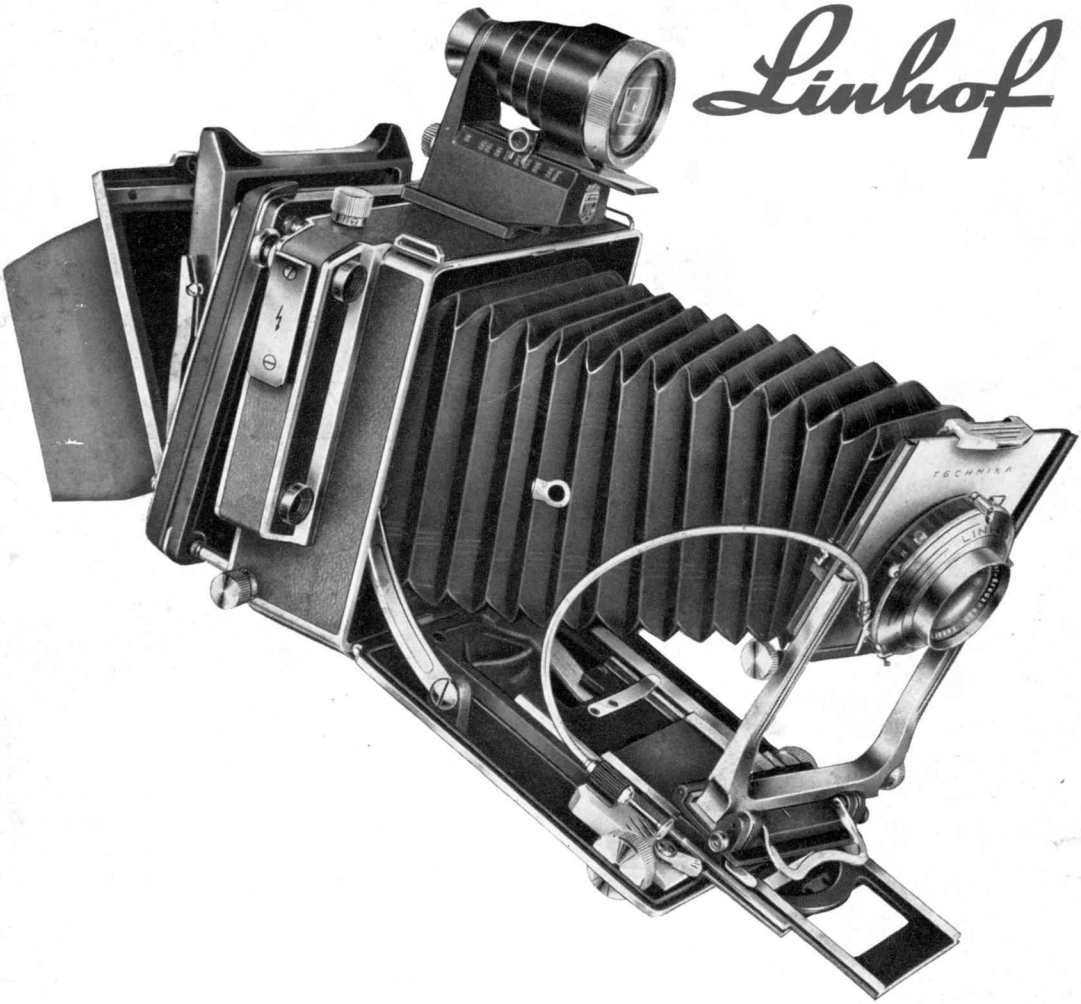

SUPER TECHNIKA

4 x 5

Condensed Operating Instructions

To open camera - press down rectangular catch at top center of camera bed, releasing bed and letting it down gently until struts (**14**) lock in the lower notches (see illustration).

To close camera - first make sure that all adjustments have been returned to "zero" position. While holding in infinity catch (**45**) push lens standard slowly back into housing. (Avoid sudden compression of bellows). Press down struts (**14**) and close camera bed until it locks.

To pull out lens standard - grasp hinged handle (**42**) and pull forward until front clicks into infinity stop for the desired lens.

Infinity stop(s) and distance scale(s) - If your Technika was factory-equipped with two or more lenses, it may be supplied with two or more distance scales (**48**) whose infinity (∞) calibrations match corresponding infinity notches on the uper track (**50**). For easy identification, notches are marked with colored dots:

1st notch — — wide angle lens;	Index (46) stops at black scale	
2nd notch — — normal lens;	Index (46) stops at red scale	
3rd notch — — medium telephoto lens;	Index (46) stops at green scale	
long telephoto lens;	Index (46) stops at blue scale	

Distance scales are calibrated and engraved specifically for each lens. Scales for normal and wide-angle lens are combined on one slide; separate scales are required for long focus and telephoto lenses. Each scale is easily interchangeable with scales for other lenses by sliding it off the slide shoe and replacing it with the applicable scale slide. The normal position of each slide is fixed by a spring lock.

For some long focus and telephoto lenses the scale slide must be pulled out beyond the camera bed until the slide clicks into a secondary fixed position. In this position the distance index line (**46**) will match the infinity mark of the distance scale for the telephoto lens.

Changing lenses - Each lens is supplied on its own lens board (**30**). To remove lens from camera, grasp shutter housing with right hand, push back grooved lock bar (**29**) with left thumb; lift lens with lens board from standard. To insert, slip lower edge of lens board into bottom groove of standard; press upper edge of board against lock bar until it snaps into position.

Basic adjustments for specific lenses:

Wide-angle. Pull out U-standard duntil it clicks into first (black dot) infinity notch. Drop camera bed by pushing down on struts (**14**) - as if closing the camera - simultaneously pressing down camera bed until struts lock in second notches. Re-align standard by pressing in release buttons (**18**) on both sides of hinged base (**52**); tilt lens standard back until it locks. Then press down front release for upper track (**49**), **push back upper track until it clicks into a secondary fixed position.** The index line (**46**) will match the infinity mark on the scale (**48**) for the wide angle lens after this procedure has been followed. The camera can now be focused by means of the rangefinder in the usual way after the cam has been exchanged too. To bring the camera back to normal position, first depress second release for upper track (**41**), pull track forward, and then press down first release for upper track (**49**). The track will click into the normal position.

Caution: Remove rangefinder cam from cam shoe before dropping camera bed to last (third) notch; otherwise cam and rangefinder linkage may be damaged. The deep drop of the camera bed is needed only for use with extreme wide-angle lens and auxiliary focusing device.

The universal (multifocus) **range finder is adjusted at the factory for wide-angle lenses to operate only with dropped bed.** Dropping the bed prevents the front edge of the bed from vignetting the picture area.

Normal lens. Camera bed and U-standard in normal position. (Struts locked in lower notches, standard vertical). Press down infinity release (**45**) so that the lens standard can be pulled out to the (red dot) infinity notch for the normal lens. Index line (**46**) will match the infinity mark on normal lens scale (**48**).

Telephoto lenses 240 mm or 270 mm. Camera bed and U-standard in normal position. Press down infinity release (**45**) so that the lens standard can be pulled out to the (green dot) infinity notch. Insert correct distance scale slide (**48**). When using a 270 mm lens, pull out the distance scale slide about 15 mm (5/8") until it clicks into secondary locked position; index line (**46**) will match the infinity mark on scale slide.

Telephoto lens 360 mm. Camera bed and U-standard in normal position. Pull out standard until it clicks into (blue dot) infinity notch. Now press down upper track releases (**41+49**)

IMPORTANT: Before closing camera, always return lens standard to zer

www.orphancameras.com

and **pull out upper track (50)** about 30 mm (1¼"). Insert special distance scale for 360 mm lens; pull out scale slide until it clicks into secondary locked position; index line **(46)** will match the infinity mark on scale slide **(48).**

Note: The upper track and the distance scale slide must be pulled out also for any "normal" lenses beginning with 210 mm focal length.

Critical focusing is done by turning focusing knob **(21)** while using universal (multifocus) range finder or ground glass. The focusing position is locked by using lever **(22).**

Universal (multifocus) **range finder:**

Cams. Each lens coupled to the range finder is supplied with an individually calculated and plotted precision cam **(40)** on which the focal length and serial number of the lens, and the serial number of the camera are engraved in the same color as the corresponding infinity notch and distance scale.

To remove cam. The cam becomes accessible if the standard is pushed into the camera housing and the track is racked out by turning focusing knob **(21).** Lift cam slightly from camera bed and pull it out of the cam shoe **(39).**

To insert cam. (Standard in housing, track racked out). Lift shoe (39) slightly, insert cam and push in **as far as it will go** against stop pin.

Range finder focusing. Make sure that cam matches the lens used, and that the standard has been placed at correct infinity position. The swinging back **(6)** must be locked flush against camera body.

Two images are seen through the range finder eye piece **(8);** a "direct" image through the upper aperture, a "reflected" image from the lower aperture **(13).** Turn focusing knob **(21)** until the direct and the reflected image become **one.** The lens is perfectly focused when the two images coincide in this manner. Look straight through the center of the range finder eye piece **(8)** to obtain consistently accurate results. A few practice comparisons of range finder focusing with ground glass image will give you the proper "touch" and assurance.

The upper track (50) for triple extension is used with long focus lenses, and for macro- and copy work. Press down upper track releases **(41+49)** and pull out track to locking position. The bellows will un-hook automatically. (Remove cable release from body shoe before pulling out upper track.)

Rising and falling front. Turn adjustment knob **(15)** to raise lens for correction of converging lines. Zero position is indicated by index line.

Lateral shift. Turn adjustment knob **(43)** to shift lens standard to right or left. Zero position is shown by index line.

Swinging front. While holding down front release lock **(20)** swing standard left or right from its vertical axis. Zero position is indicated by a click stop.

Swinging and tilting back (6) can be un-locked by loosening the four lock knobs **(7).** The back can be drawn back and, if desired, tilted in any position including the diagonal; it is locked in any position by tightening lock knobs **(7).** The back affords a means of controlling distortion, depth of field, and perspective. The universal (multifocus) range finder is, of course, inoperative when the swinging and tilting back is being used.

Use ground glass when employing swings, tilts, or shifts.

Extreme wide-angle Angulon 65 mm. The Technika can be modified for use with this lens which is of decisive value for certain Architecture and Engineering subjects. Information about the necessary modification will be furnished on request.

Care of leather bellows on LINHOF Technika Cameras:

Always open or close bellows slowly.

The triple extension bellows for Linhof cameras are made of the finest quality leather for utmost flexibility in using swings and tilts, and for lasting service.

Care must be taken to pull out bellows slowly; if it is done quickly, a vacuum is created, causing the bellows to collapse. This is particularly true when a film holder or magazine is left in the camera back making the camera airtight.

The same slow movement is recommended when closing the bellows; sudden compression tends to "balloon" the bellows and may cause permanent demage.

These facts apply to all bellows cameras, but are particularly important on the Technika because of its triple extension bellows.

zero position indicated by index lines on side and base of the U-standard!

Linhof

SUPER TECHNIKA

4 x 5

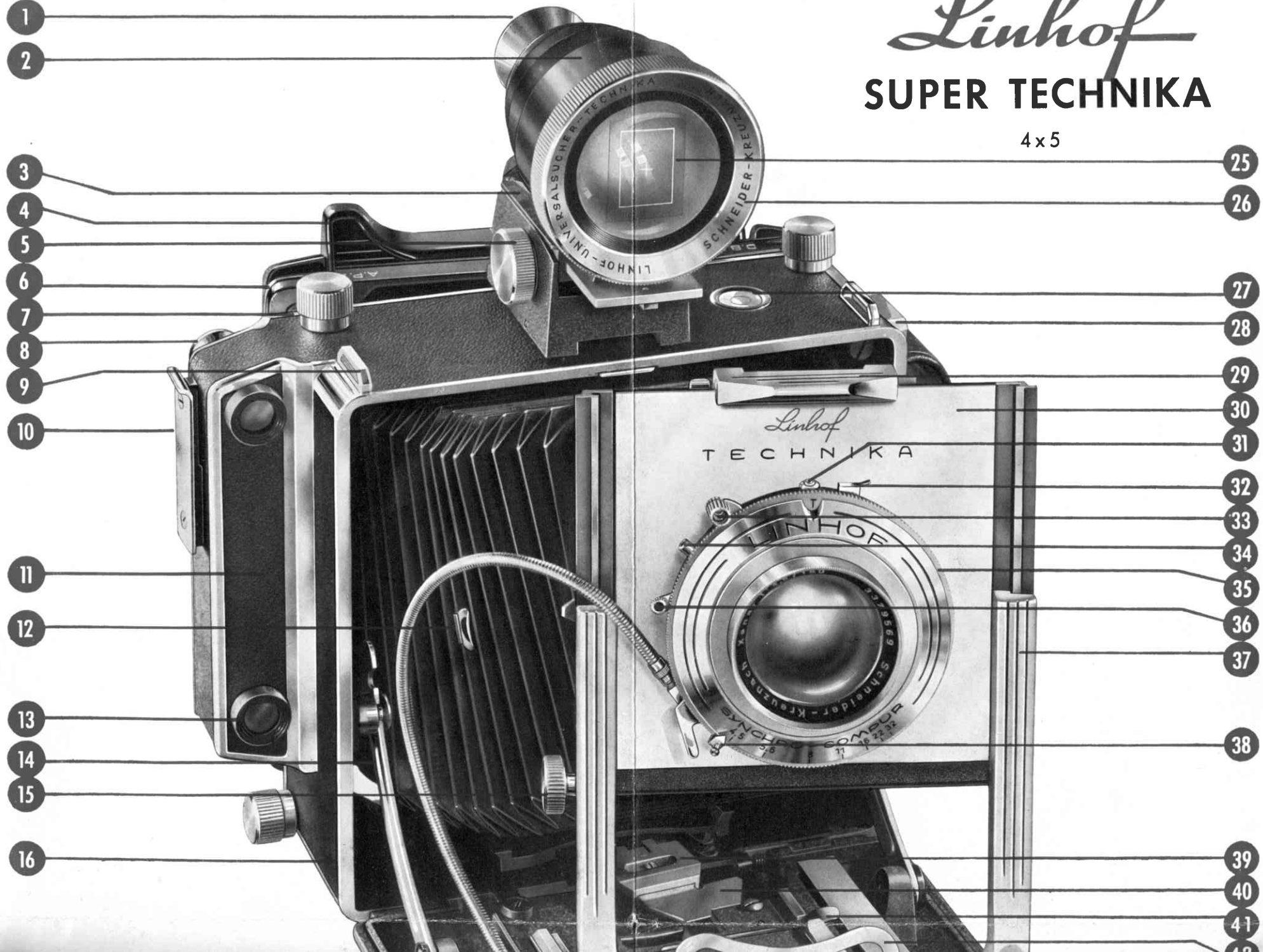

www.orphancameras.com

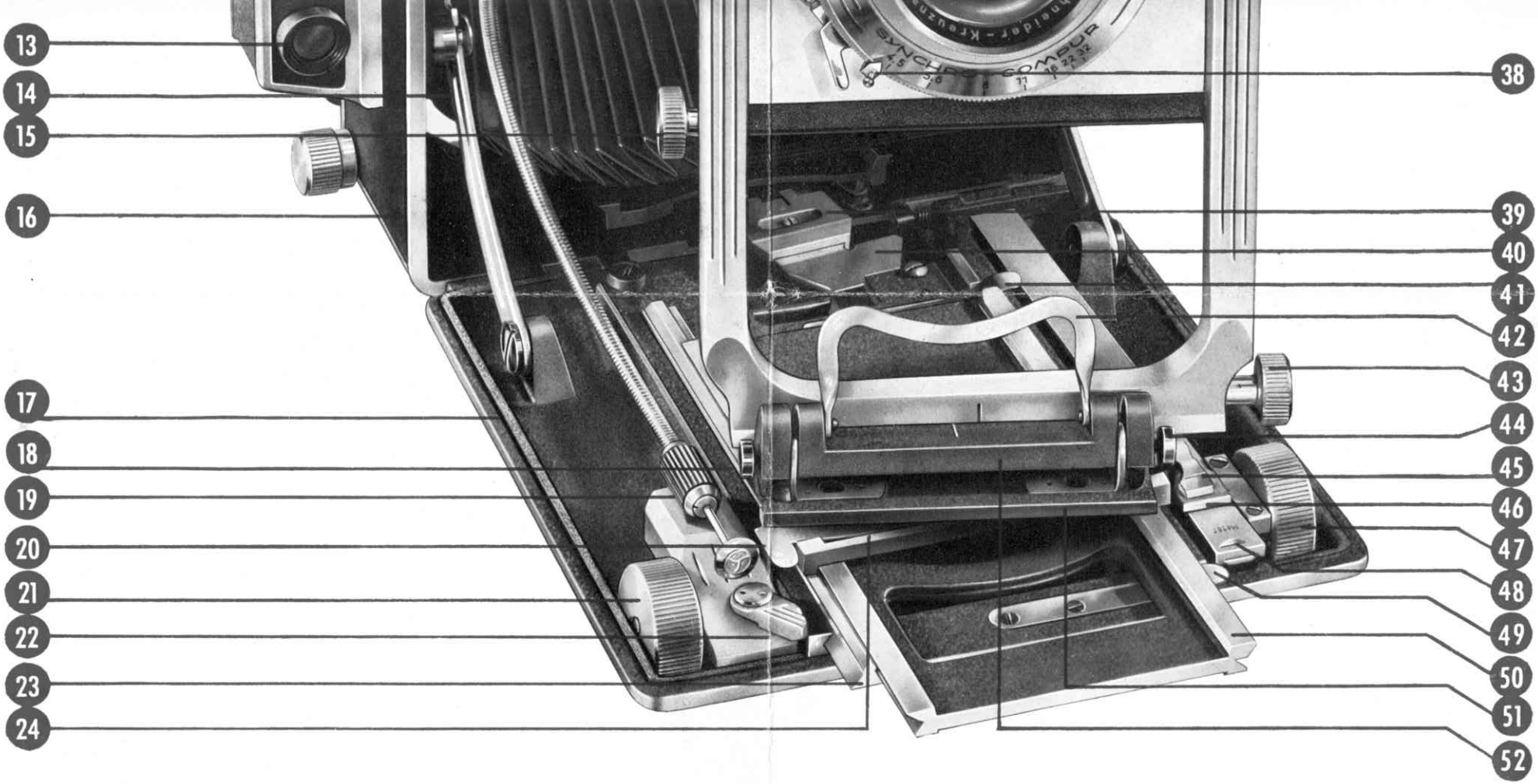
13
14
15
16
17
18
19
20
21
22
23
24
38
39
40
41
42
43
44
45
46
47
48
49
50
51
52

1. Multifocus viewfinder eye piece
2. Telescoping viewfinder housing
3. Focal length setting scale for 9x12 cm/4x5" lenses. (Scale on opposite side for 13x18 cm/5x7" lenses)
4. Ground glass frame of universal camera back
5. Rack and pinion knob for setting focal length
6. Swinging and tilting back for distortion control and increase of depth of field
7. Lock knobs for swing back (4 each)
8. Rangefinder eye piece
9. Eyelet for neck strap
10. Flash gun bracket
11. Multifocus rangefinder
12. Triple extension bellows (full extension 15") with hook and eye to hold bellows in place
13. Lower rangefinder window (rangefinder has a base of 90 mm)
14. Drop bed strut with notches for regular and wide angle position
15. Geared rising front adjustment knob
16. Camera housing, cast of a corrosion-resistant and extremely sturdy light metal alloy
17. Drop bed, cast of the same sturdy material as the camera housing
18. Release knob for tilting lens standard (same as **44**)
19. Cable release with special shoe for attachment to the cable release socket
20. Swing front release lock (illustration shows front swung to the right)
21. Rack and pinion focusing knob for triple extension rack (same as **47**)
22. Track locking lever
23. Lower track with helical racks
24. Lower part of U-standard base
25. Outline of 6x9 cm/2¼x3¼" area, when using 120 ROLLEX with the TECHNIKA 9x12 cm/4x5". When finder is used with the TECHNIKA 13x18 cm/5x7", outline shows 9x12 cm/4x5" area. In the latter instance the field is approximately correct.
26. Revolving front lens mount for vertical and horizontal adjustment of multifocus rangefinder outline
27. Spirit level (recessed in camera body)
28. Cable release socket (body release)
29. Quick change lensboard lock bar
30. Removable lensboard
31. Delayed action knob (Compur I shutter only)
32. Press focusing button, can be used only after shutter has been cocked
33. Cocking lever of Compur shutter
34. Socket for flash cable (shutter features internal synchronization)
35. Time setting ring of Compur shutter
36. Synchronization lever (position X for electronic flash, position M for bulbs)
37. U-shaped lens standard; extra strong and wide to accept large long focus and high speed lenses
38. Diaphragm setting lever
39. Prismatic shoe for rangefinder coupling cams
40. Interchangeable cam for rangefinder coupling
41. Second (back) release for upper track
42. Hinged pull-out handle for lens standard
43. Geared adjustment knob for lateral shifting of lens standard
44. See number **18**
45. Infinity notch release knob
46. Distance index with magnifier
47. See number **21**
48. Interchangeable distance scale slide, engraved for normel and wide angle or for telephoto lens
49. First (front) release for upper track
50. Upper track (triple extension)
51. Middle part of U-standard base (swings)
52. Upper part of U-standard base (tilts).

A sportsfinder or wire-frame finder may be used instead of the multifocus (universal) viewfinder shown above.

NOTE: Minor technical details are subject to modification without notice.

www.orphancameras.com

THE UNIVERSAL 4x5" Back with EKTALITE FIELD LENS

for use with all types of film holders

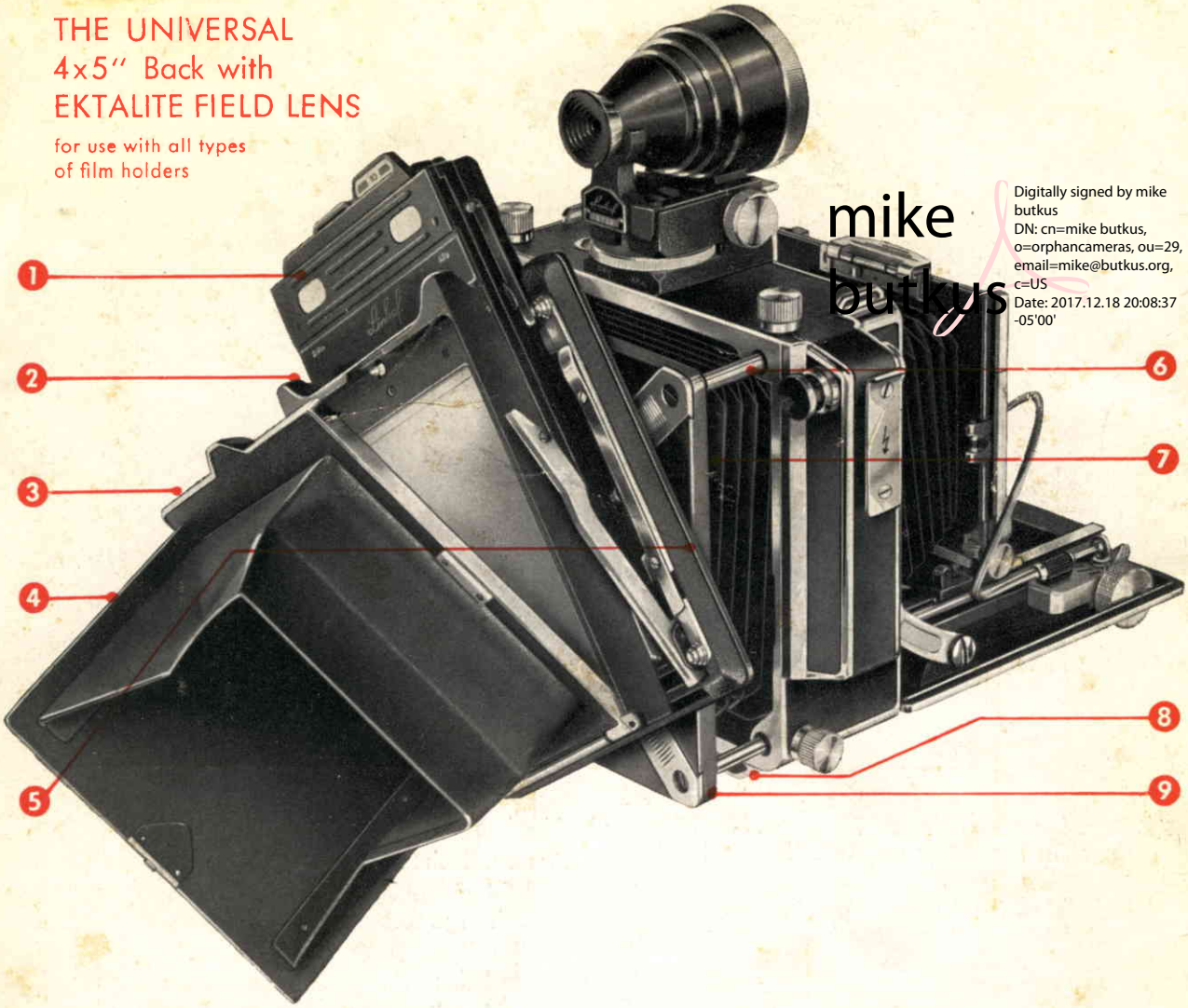

mike butkus
Digitally signed by mike butkus
DN: cn=mike butkus, o=orphancameras, ou=29, email=mike@butkus.org, c=US
Date: 2017.12.18 20:08:37 -05'00'

1. Accepts all 4x5 double cut film holders and accessories
2. Detachable ground glass spring back
3. Hinged focusing hood; can be swung open to permit use of magnifier directly on ground glass.
4. Foursided all leather focusing hood with depth of field scale on cover
5. Detachable revolving back for horizontal or vertical pictures with click stops at 90° intervals. (Single 9x12 cm holders with an adapter or the 120 Rollex roll film holder may be used.)
6. Adjusting pin for swinging, tilting, extension back
7. Swinging and tilting back frame
8. Sturdy base plate with tripod socket
9. Lock slide (one at each corner) for quick change of entire back.

For more Information about the LINHOF System see your LINHOF Dealer

Linhof

1887

Sole US Distributor

KLING PHOTO CORPORATION · New York 3, NY · Los Angeles 46, Cal.